Padlock & Auxiliary Lock

Travel Sentry Approved

Premium Luggage Combination Padlock(SD)

Product Code	Size	Color	Model No.
PLAB00054	30 mm	Red	105 LC - 33 RE
PLAB00055	30 mm	Yellow	105 LC - 33 YE
PLAB00056	30 mm	Blue	105 LC - 33 BU
PLAB00057	30 mm	Silver	105 LC - 33 SL
PLAB00058	30 mm	Black	105 LC - 33 BL

Business Luggage Combination Padlock(SD)

Product Code	Size	Color	Model No.
PLAB00049	30 mm	Black	022 LC - 31 BK
PLAB00050	30 mm	Silver	022 LC - 31 SL
PLAB00051	30 mm	Yellow	022 LC - 31 YE
PLAB00052	30 mm	Blue	022 LC - 31 BU
PLAB00053	30 mm	Red	022 LC - 31 RE

Luggage Combination Lock(SD)

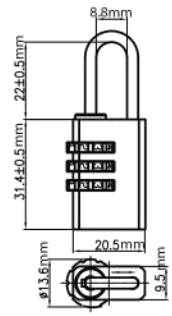

Product Code	Size	Model No.
PLAB00059	20mm, 3 digits	500 LC-20-3
PLAB00060	30mm, 3 digits	500 LC-30-3

TSA ACCEPTED | TRAVEL SENTRY® APPROVED

2 STRENGTH RATING

TSA ACCEPTED | TRAVEL SENTRY® APPROVED

2 STRENGTH RATING

2 STRENGTH RATING

3 - Digit Combination Can be Reset Easily

Brass Padlock w 3 Keys (SD)

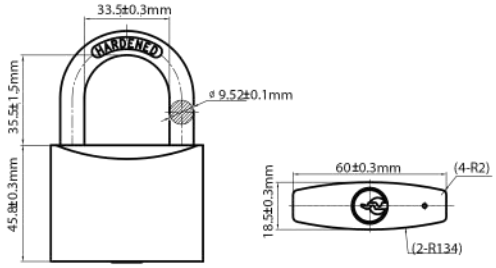

Product Code	Size	Model No.
PLAB00061	20mm	120 BP - 20
PLAB00062	25mm	120 BP - 25
PLAB00063	30mm	120 BP - 30
PLAB00064	40mm	120 BP - 40
PLAB00065	50mm	120 BP - 50
PLAB00066	60mm	120 BP - 60

5 STRENGTH RATING

20 & 25mm Single Lock, 20 to 30mm SR : 3, 40mm SR : 4

Luggage Padlock w 3 Keys

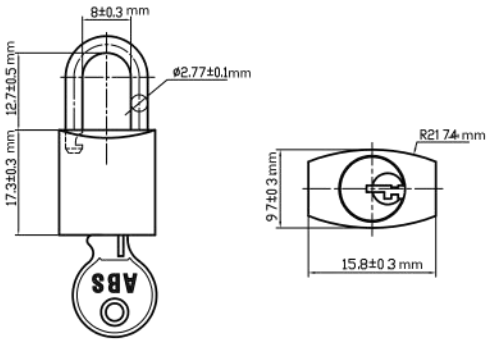

Product Code	Size	Model No.
PLAB00001	15mm	300 LP-15

2 STRENGTH RATING

Long Shackle Brass Padlock w 3 Keys

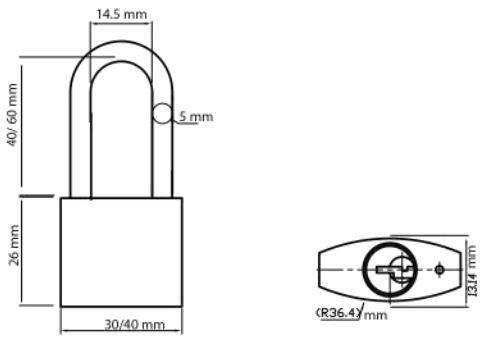

Product Code	Size	Model No.
PLAB00036	30mm #	120 LB - 30
PLAB00037	40mm	120 LB - 40

SR : 3

4 STRENGTH RATING

Keyed-Alike and Keyed-Different Available

Brass Warehouse Lock w 3 Keys(SD)

6 STRENGTH RATING

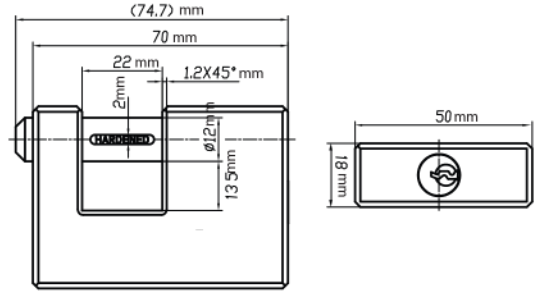

Product Code	Size	Model No.
PLAB00067	70mm	700 BW - 70

Rectangular Shape Hardened Steel Padlock w 3 Keys

7 STRENGTH RATING

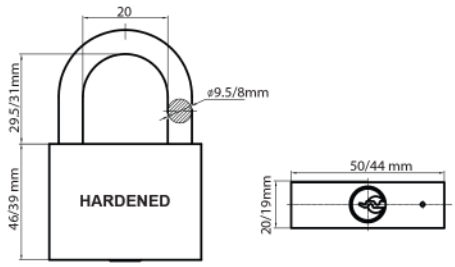

Rectangular shape
Non-Rekeyable
5-Pin
Bolt-Locking

Product Code	Size	Model No.
PLAB00035	60mm	800 HS - 60

Hardened Steel Padlock w 3 Keys(SD)

7 STRENGTH RATING

RUST PROOF INTERIOR

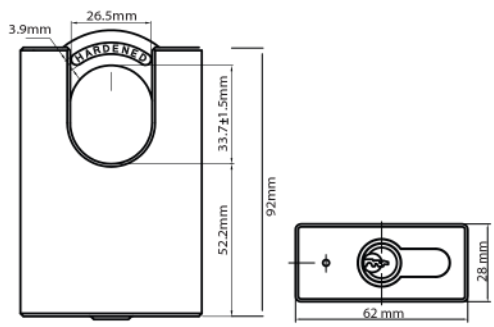

Product Code	Size	Model No.
PLAB00068	60mm	900 HS - 60

Weather Proof Lock w 3 Keys

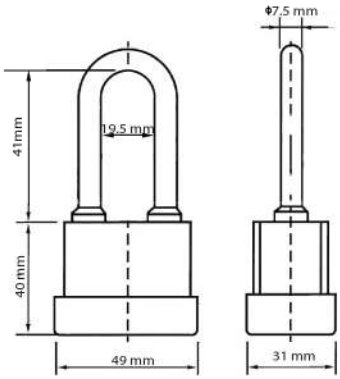

Product Code	Size	Model No.
PLAB00028	50 mm	400 WP - 50 - BK

Brass Drawer Lock w Latch w 3 Keys

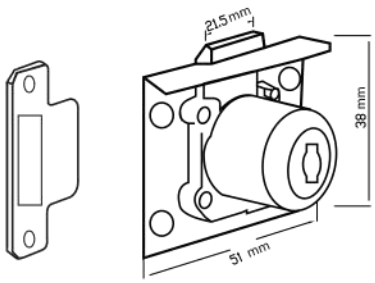

Product Code	Size	Model No.
PLAB00038	20mm	100 BD - 20

Brass Drawer Lock w Deadlock w 3 Keys

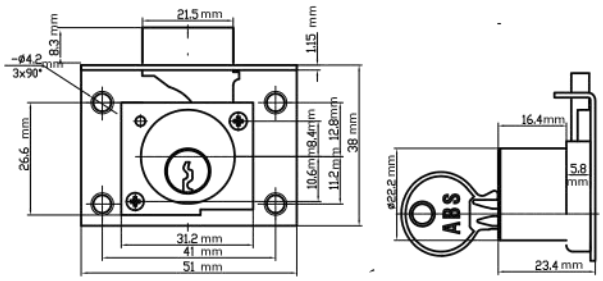

Product Code	Size	Model No.
PLAB00039	23mm	100 BD - 23

7 STRENGTH RATING

ILLUMINATED

Motorcycle & Bicycle Lock w 3 Keys

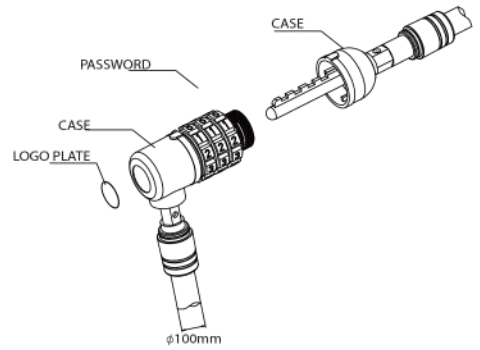

Product Code	length	Diameter	Model No.
PLAB00022	1800 mm	100 mm	1000 ML - 100

7 STRENGTH RATING

Motorcycle & Bicycle Lock w 3 Keys

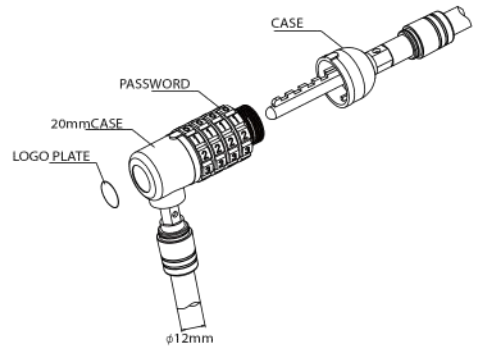

Product Code	Dimension	Model No.
PLAB00033	ϕ 12x1000mm	1000 ML - 12

7 STRENGTH RATING

Motorcycle & Bicycle Chain Lock w 3 Keys

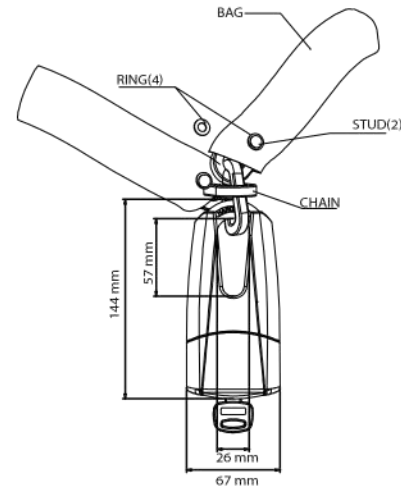

Product Code	Dimension	Model No.
PLAB00031	ϕ 10.5x10.5x1000mm	1000 ML - 10

ABS Building Products Pte Ltd , #06-09 Orion@PayaLebar , 160 Paya Lebar Road , Singapore 409022 , MacPherson MRT exit A , T: 65-6841 7600 Ext.200 , F: 6841 7300 , : 9248 7647 / 8322 0647
ABS Hings Building Products Pte Ltd . #06-09 Orion@PayaLebar . 160 Paya Lebar Road . Singapore 409022 . MacPherson MRT exit A . T: 65-6841 7600 Ext.200 . F: 6841 7300 : 9424 3330
ABS Building Products Co Ltd . Unit 16 . 5/F Metro Centre II . 21 Lam Hing Street . Kowloon Bay . Kln . Hong Kong . T: 852-3904 3567. F: 3904 3532 . : 5646 8340 . QQ: 2272 928033
ABS Building Products Sdn Bhd. 29-G Jalan USJ Sentral 3 · USJ Sentral Persiaran Subang 1 · 47600 Subang Jaya · Selangor · Kuala Lumpur · Malaysia · : 60-12389 0833
ABS Building Products - CHINA : 86-147 1433 8340 / 147 1433 5470
enquiry@absbldg.com **www.absbuildingproducts.com** **www.absbldg.com**

All rights reserved. No part of this publication may be reproduced, stored in a retrieval system or transmitted, in any from or by any means, electronic, mechanical, photocopying, recording or otherwise, without the prior permission of the copyright owner. Dimensional data is not binding. We also reserve rights to alter specifications and technical data without notice. 2015.